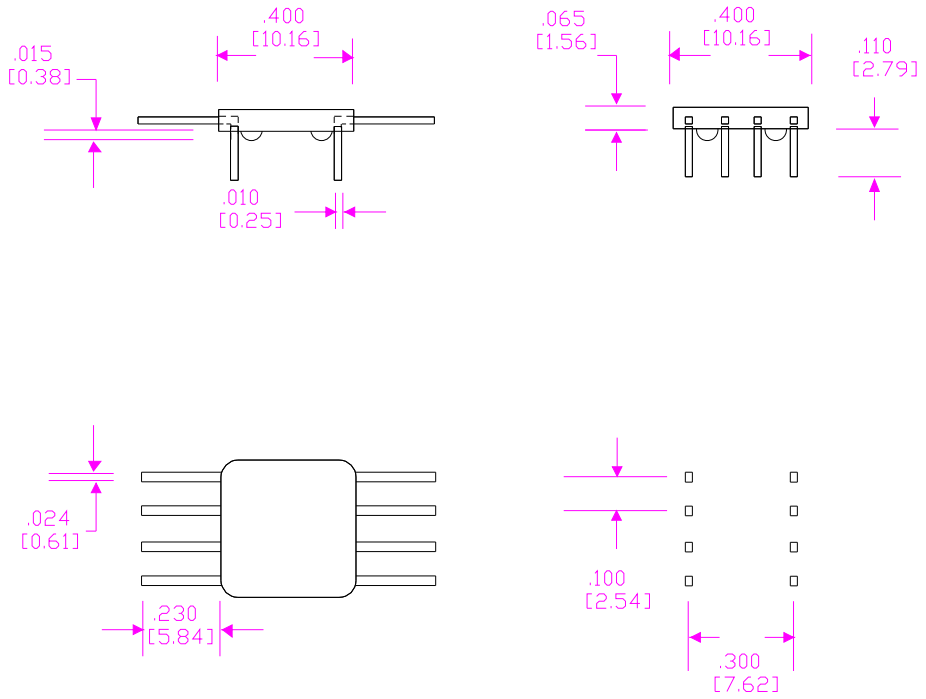

+/- .010 Inches
(mm) 2 x Size

TOLERANCE: PIN PITCH ±0.1 ROW PITCH ±0.3		DECIMAL. X ±0.3 .XX ±0.2		CHECK	黄 勇
SHEET OF		REV.	A	DRAWING	宋耀林
深圳中晟磁电有限公司 Shenzhen CB Magnetics Co.,Limited	TEL	0755-61124460	MATERIAL	DAP4(Black)	
	FAX	0755-61124460	PIN MATERIAL	Phosphorous Bronze	
	UNIT	m/m	PART NO	DG400-8/PH	DATE 2016-7-30